2" RATCHET WITH SNAP HOOK | 11,000 LBS. BS

SKU: R51SH

SIDE

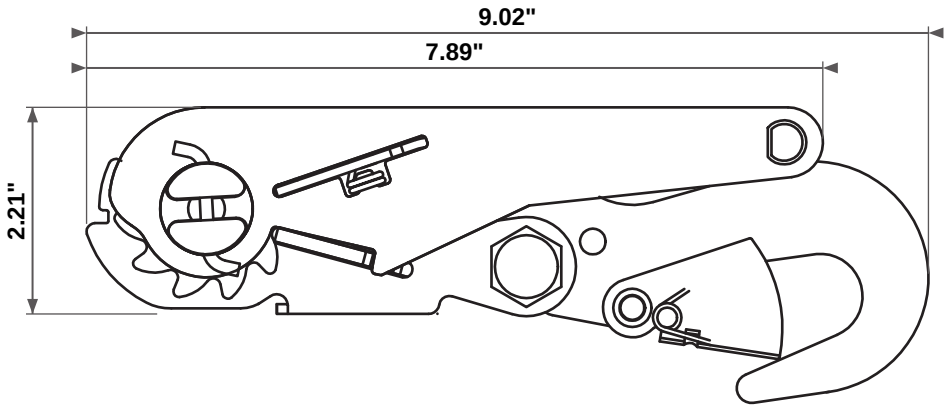

TOP

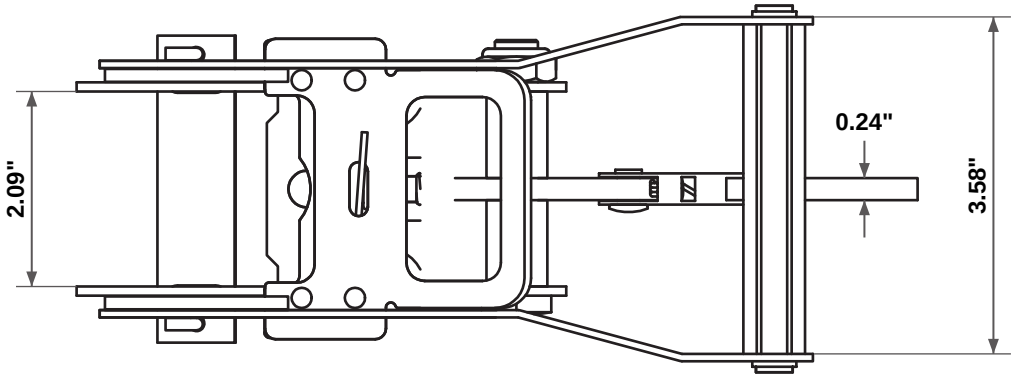

Material	Finish	Break Strength (lbs)	Weight (lbs)
Steel	Zinc Plated	11,000	2.35

Dimensions in inches (nominal). Drawing is not to scale.