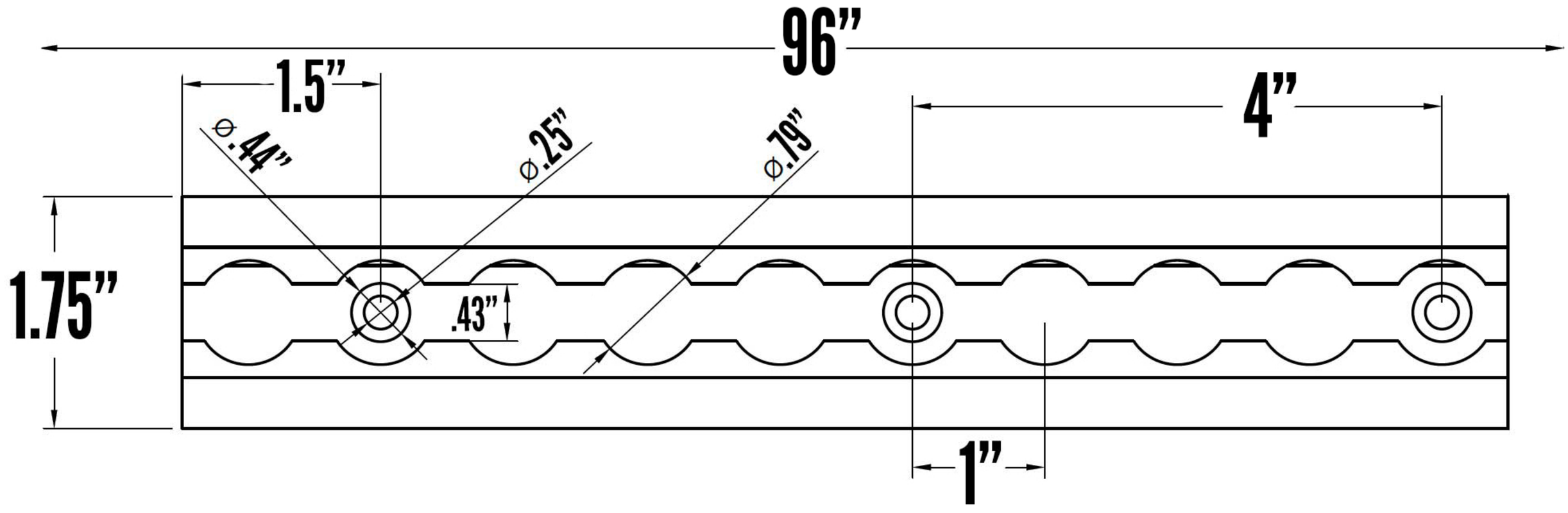
96”
1.5”
4”
ϕ.44”
ϕ.25”
ϕ.79”
1.75”
.43”
1”

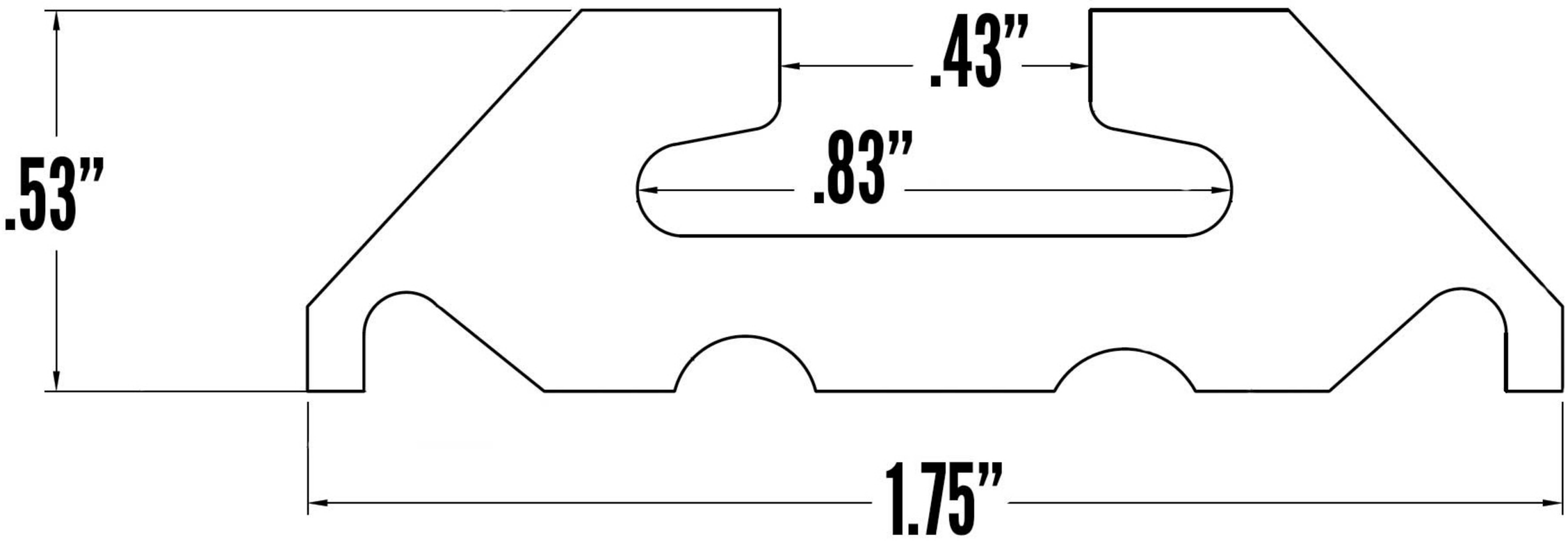
.43”
.83”
.53”
1.75”