US Cargo Control Logistic Track (L-Track) Specifications Sheet: 96 Inch Track

BIRD'S-EYE TOP VIEW:

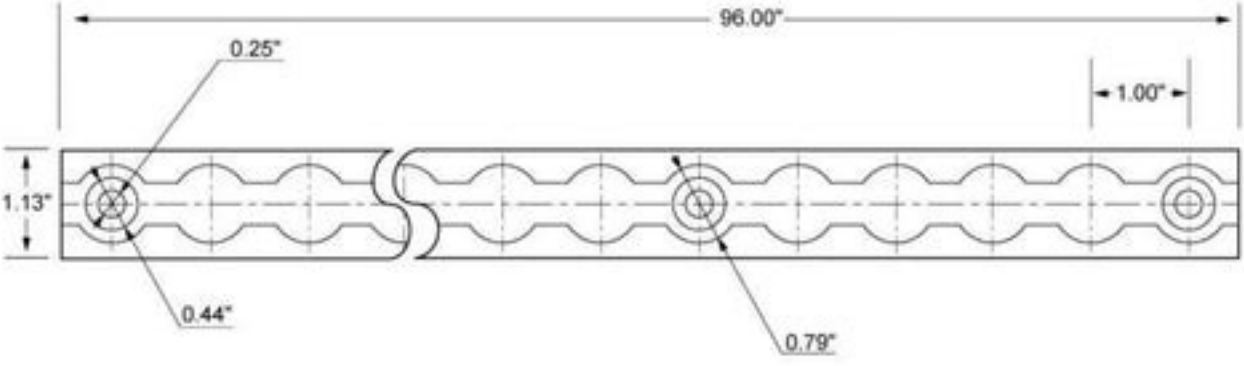

PROFILE VIEW:

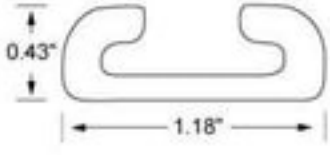

BIRD'S-EYE BOTTOM VIEW:
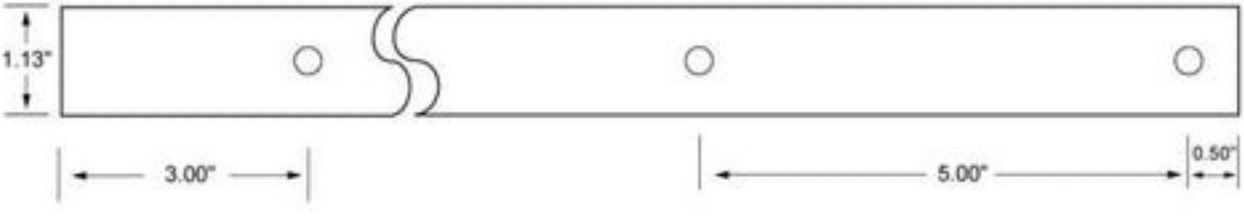
20 TOTAL MOUNTING HOLES | All mounting holes have 5" spacing between each.